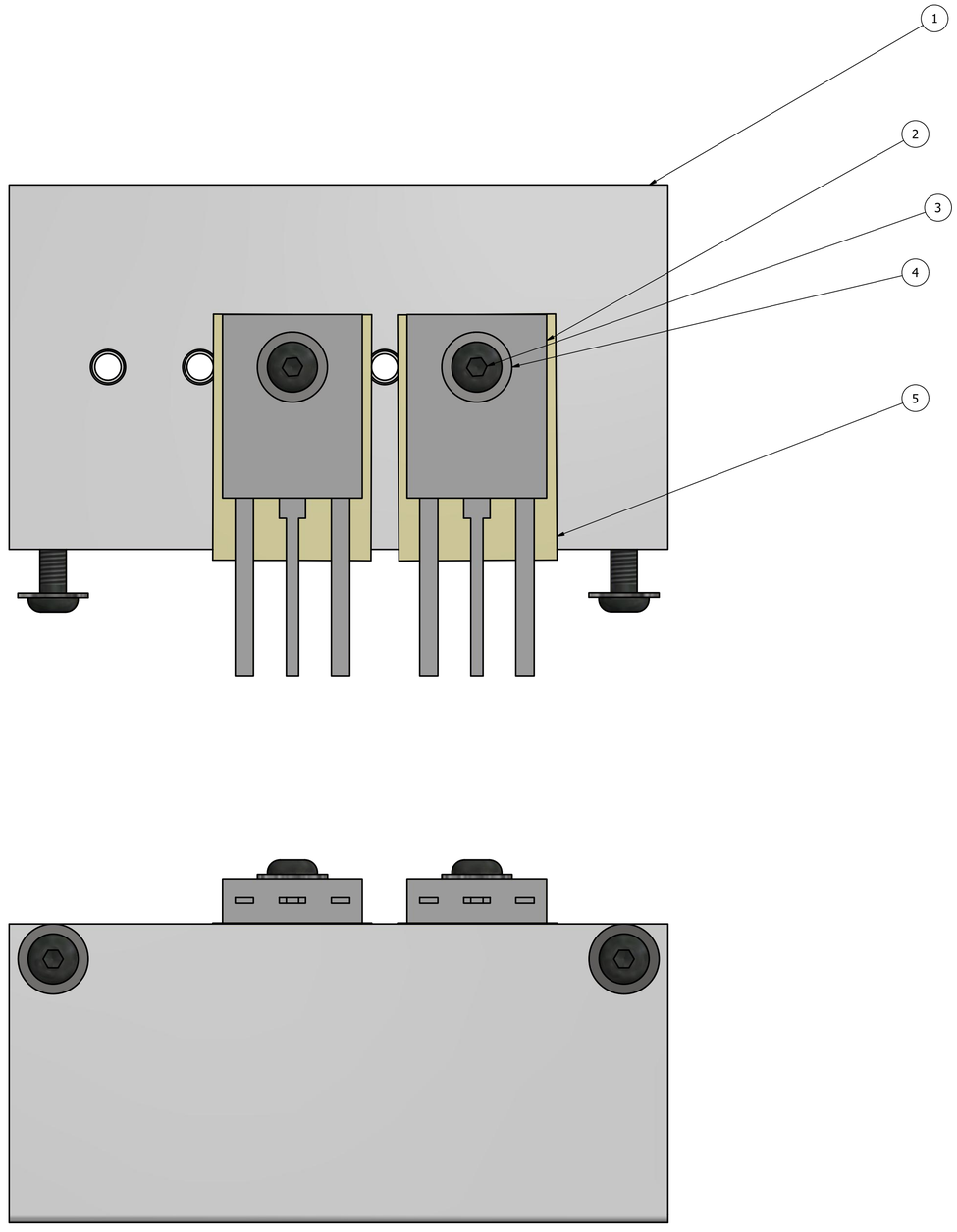

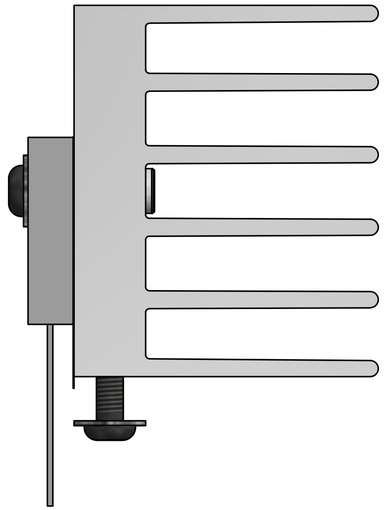

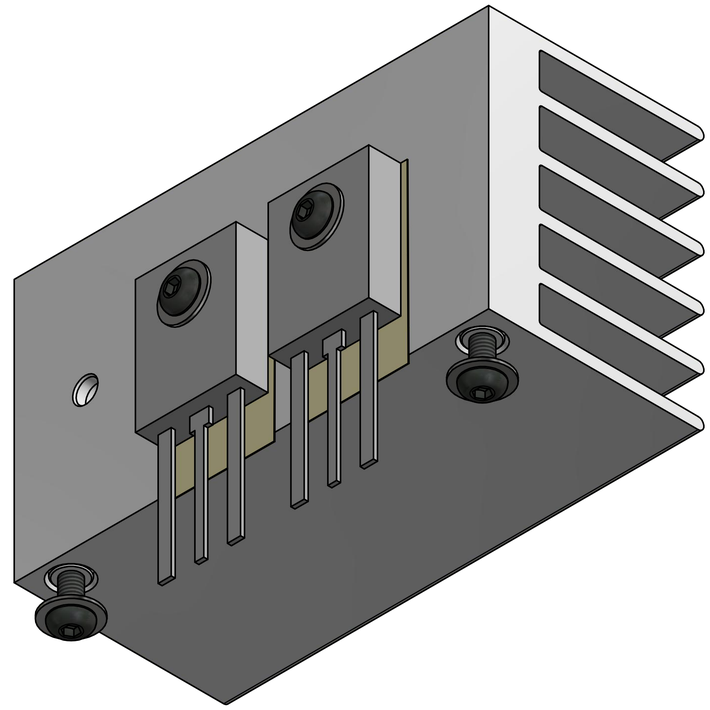

PARTS LIST			
ITEM	QTY	PART NUMBER	DESCRIPTION
1	1	HT100002270	
2	2	to247	T3, T4, IPW60R018CFD7
3	4	ISO 7380-1 - M3 x 10	Hexagon Socket Button Head Screw - Product grade A
4	4	ISO 7089 - 3,5	Plain washers - Normal series - Product grade A
5	2	Heat conducting disc Distrelec 175-60-523	

DRAWN	zechnerf	25.11.2019	
CHECKED			
QA			TITLE
MFG			
APPROVED			
		SIZE D	DWG NO HT100002270 Assembly Modul REV
		SCALE 3:1	SHEET 1 OF 1